KALYN SIEBERT®

13 AXLE

Office: 657.650.2763
mike@powercrane.com
8502 E. Chapman Ave., Ste. 455, Orange, CA 92869

INDEX

A. Introduction
- A.1 Purpose of Document

B. Your Trailer Information
- B.1 Specification of the Build

C. Important Safety Messages
- C.1 Safety Messages

D. Equipment Operation
- D.1 Equipment Introduction
- D.2 Connecting Equipment to Prime Mover
- D.3 Disconnecting from Prime Mover
- D.4 Understanding Equipment controls
- D.5 Equipment Operations
- D.6 Accessories

E. Preventative Maintenance
- E.1 Lubrication
- E.2 Tires & Wheels
- E.3 Brakes
- E.4 Torque Requirements
- E.5 Axle alignment
- E.6 Preventative Maintenance Schedule

F. Parts of your Equipment
- F.1 Ordering Parts and Accessory Equipment

G. Warranty
- G.1 Limited Warranty Agreement
- G.2 Copy of Equipment registration form

Office: 657.650.2763 mike@powercrane.com 8502 E. Chapman Ave., Ste. 455, Orange, CA 92869

A. INTRODUCTION

Thank you for trusting and purchasing Kalyn Siebert Equipment. We at Kalyn Siebert take pride in the products we manufacture. We trust you will be well satisfied with your purchase.

Kalyn Siebert has a long heritage of serving the customers in the trailer industry from 1961. We are recognized as the premier engineering and manufacturing company of the most diverse line of heavy-duty trailers and related products and services for the military, energy, construction, and transportation markets. Through strong relationships, building the highest quality products, and delivering the best customer service we stand tall among the industry. We welcome you to the Kalyn Siebert Family.

A.1. PURPOSE OF DOCUMENT

The purpose of this manual is intended to help ensure the safe and efficient operation of your Kalyn Siebert equipment.

CAUTION Incorrect operation, maintenance or repair, this equipment can cause severe injury, death and or property damage. Those who use, operate, maintain and repair the equipment should be trained in its proper use, operation, maintenance and repair, warned of its dangers, and should read this entire manual before attempting to use, operate, maintain, set up, adjust, service or repair the equipment. Recommended operating practices furnished in this manual are general industrial practices.

NOTICE Keep this manual for future reference.

Office: 657.650.2763 mike@powercrane.com 8502 E. Chapman Ave., Ste. 455, Orange, CA 92869

B. Your Trailer Information

Family: Kalyn Siebert – Siebert 13 Axle Trailer

Model: Siebert 13 Axle: 3+3+3 Set up, 85 Ton Trailer

6 Axle Steer system is part of our heavy haul family

VIN number: 5DDSB416X91004766

Your unit was built with the following specifications

Item	Specification Description
Capacity	60 Ton capacity GAWR & tire rating determine legal loads
Width	10' wide
Booster spread	16' 1"
Bolster height	36 " with hydraulic tower in the down position,
Axles	Six, round with 3/4" wall, tapered spindles, 25,000 lb capacity, 98" track.
Suspension	Ridewell air ride suspension with raise and lower valve twist knob type with separate dump valve liquid filled air pressure plumbed to gauge air pressure all the time gauge,60" axle spacing, with cut off valves and lift chains
Brakes	12'/ X 7 1/2 air brake parking brakes on 3 axles
Slack adjusters & brake chambers	Automatic slack adjusters,
ABS	None
Wheel covers	Poly wheel covers
Hubs	8 Stud, hub piloted, long studs, steel hub, oil seals
Drums	Cast drum
Wheels	Steel disc wheels, 6.75X 17.5
Tires	Michelin 245/70R 17.5
Mud flaps	Black Anti-Spray with Kalyn Siebert Logo
Finishing (Paint & trim)	Shot blasted prior to paint. Epoxy primer and black polyurethane paint. Air, electrical and hydraulic lines installed after painting is completed.
Lights & electrical	LED lights, 12 volt. 7-way plug. With amber flashing light

Office: 657.650.2763 mike@powercrane.com 8502 E. Chapman Ave., Ste. 455, Orange, CA 92869

Steering	Mechanical self steering, with adjustment for tracking for different length loads, includes wireless remote hydraulic over-ride. Visual and Audio steering max warning system included. 13 hp Honda power pack
Power tower	Hydraulic power tower with 10" lift operated off of steering power pack
Center turntable	Center lube point for grease zerts under turntable.
Wide load sign	Wide load sign on rear of booster
Flag holders	Flag holders front and rear of steer dolly
Push bar	Included
D-rings	Four D-rings on booster balanced for stacking

For all inquiries, refer the equipment using the model and VIN number of your unit which could be found on the manufactures data plate attached to the equipment.

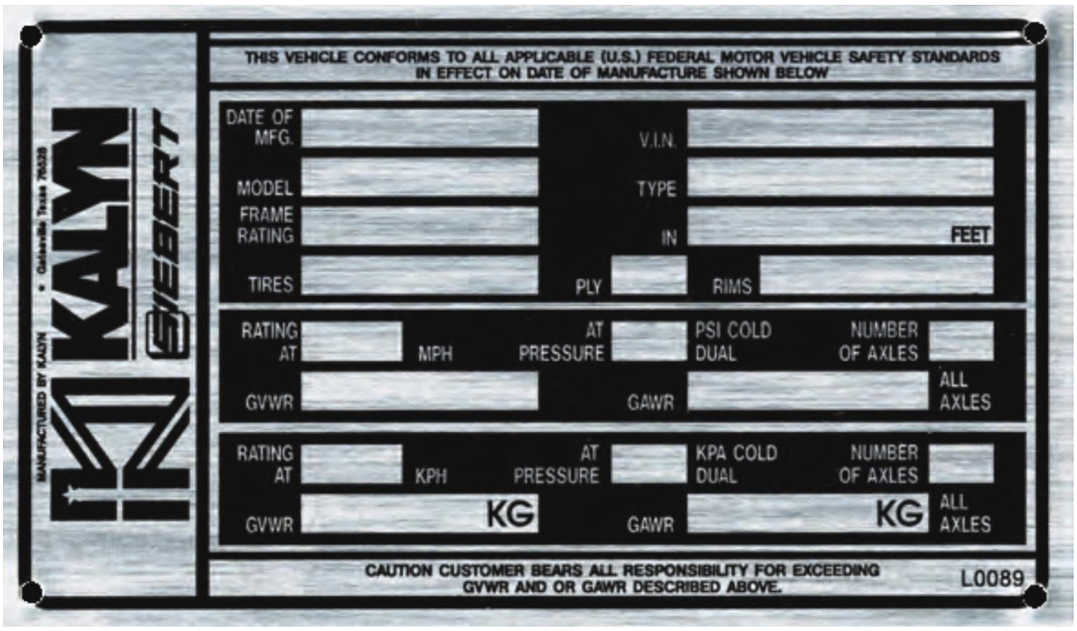

C. IMPORTANT SAFETY MESSAGES

All work equipment has the potential to cause problems in the workplace. If we fail to manage the risks associated with the use of work equipment, we could be putting the person using that piece of equipment and others at risk. We can mitigate the risk to personal and property by selecting suitable equipment, using it properly, following manufactures recommendations and training people to use the equipment correctly. However, if not used appropriately, they can pose serious risks. Please read the section before operating Kalyn Siebert equipment.

C.1. SAFETY MESSAGE DEFINITIONS

The following are the safety alert symbols used throughout this manual. 'Danger' and 'Warning' signs accompany instances of resulting condition could be serious damage, serious injury or death to operator and/or equipment.

'Caution' and 'Notice' signs accompany of instances of resulting condition could be minor/ moderate damage to equipment/ property and/or minor/ moderate injury to personal.

When you see these symbols, carefully read the messages that follow and be alert to the possibility of environmental and/or property damage, personal injury or death to yourself or others.

C.2. SAFETY MESSAGES

Do not alter or modify any of the equipment or components provided with the equipment / trailer. Use of non-Kalyn Siebert parts or non-OEM component parts may cause serious injury or death.

Overloading will aggravate the conditions that cause tip-overs. Kalyn Siebert trailers are designed to carry and handle legal loads. Damage to personal or equipment could be caused due to overloading. Do not exceed the GVWR & comply with local laws.

Proper operation of the Kalyn Siebert equipment / trailer's primary brake system is essential for safe operation of the

vehicle. A functional system check is necessary each time the equipment is put into service.

WARNING

Like any other vehicle, Kalyn Siebert trailers can tip or slide out of control if turns are negotiated at too high a speed or when making violent maneuvers such as abrupt lane changes. Such unsafe and improper operation may cause serious personal injury, including death, to the operator, handlers, and bystanders.

WARNING

Never set a loaded trailer on landing legs that are not intended for that purpose.

CAUTION

Inspection of equipment, safety devices, and working areas must be performed before each trip to ensure personal and operational safety and to correct potential or actual hazards.

CAUTION

Decals are posted on the equipment to alert the operator or to give important safety instructions. Decals should be replaced if they are torn, damaged or if they become illegible.

CAUTION

The trailer should not be operated if any of the following conditions exist:

- Damage to lighting fixtures, wiring, electrical conduits, or inoperative lights
- Leaking or malfunctioning equipment
- Damage to the tractor or trailer, including but not limited to interior damage
- Inoperative brake systems (primary or parking)

Failure to correct or repair any of these conditions may result in extensive property damage and/or serious personal injury, including death.

CAUTION

If the Kalyn Siebert trailer is uncoupled in soft surface like mud, snow or sand, use extra shoring to provide an adequate base for the landing gear support pads.

CAUTION

To avoid damage to bearings and potential wheel end failure, use only compatible lubrication products recommended. Use the right hydraulic oil for the hydraulic system recommended. Periodically lubricate all the points of lubrication based on the chart in the maintenance section based on the frequency and type of lubricant recommended. For the recommended lubrication products for different application on the equipment refer the maintenance section.

CAUTION

After the first 50-100 miles, re-torque all wheel nuts to 450-500 ft.-lbs. To avoid loose or malfunctioning wheels, maintain torque levels at the proper values through planned periodic checks. Tighten all bolts and nuts every 5000 miles.

Office: 657.650.2763 mike@powercrane.com 8502 E. Chapman Ave., Ste. 455, Orange, CA 92869

D. Equipment Operation

D.1. Equipment Introduction

General nomenclature used to describe the parts of a trailer system are shown below. Along with these terms curb side (CS), road side (RS) and Rear bumper will be used throughout.

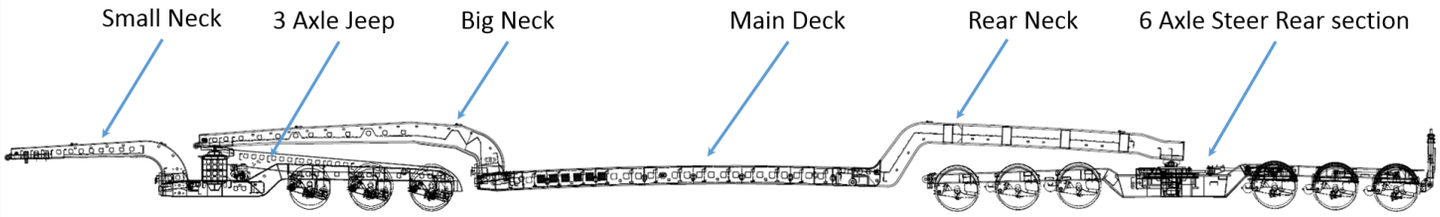

⚠ CAUTION

Failure to follow the proper procedure may result in injury or death to equipment or personal

D.2. Connecting to Prime Mover

This segment describes the method to connect a prime mover / tractor to the trailer.

a) Back up tractor to the trailer and stop just as the 5th wheel touches the trailer and apply the parking brakes
b) Get out of cab to check that the height of the 5th wheel matches that of the trailer.
c) Confirm that the handle is out and the 5th wheel locking dogs are locked
d) Check for the 5th wheel handle to be in position when 5th wheel jaws are in the locked position & there is no light or space between the 5th wheel and the trailer. Confirm 5th wheel jaws are locked behind the trailer king pin. Use a flashlight if necessary
e) Conduct a tug test to confirm that the 5th wheel is locked to the king pin. If it does not lock back up tractor again to give it another chance to lock. If this does not happen after multiple tries inspect the 5th wheel mechanism on the tractor
f) Attach the glad hands for air lines & electrical receptacle (& hydraulic if needed)

Front View of Trailer

g) Climb into the cab and roll down the window and Conduct a tug test with the trailer parking brakes "still" engaged – the trailer should not move – ensure that you release the tractor parking brakes beforehand
h) Activate air supply valve for the trailer from the tractor cab

WARNING

i) Conduct a pre-trip inspection on the trailer
j) Check brakes and lighting system for proper operation

D.3. Disconnecting from Prime Mover

This segment describes the method to disconnect prime mover from the trailer.

a) Disconnect the tractor supply and control brake hoses from the glad hands on the trailer. The trailer spring brakes will set automatically when the supply (emergency) air brake hose is uncoupled.
b) Drain any water from the air reservoir by using the drain valve at the bottom of the air reservoir.
c) Disconnect the electrical cable from the receptacle on the trailer.
d) Disconnect hydraulic line.
e) Lower the park stand style landing legs.
f) Release the trailer kingpin from the tractors 5th wheel latch.
g) Pull the tractor out from under the trailer, allowing the trailer to lower slowly until the park stand style landing leg shoes are firmly on the ground.

NOTICE

Please follow all safety precaution & have a clear area before operating the equipment

D.4. Understanding Equipment Controls

Location of Controls on Siebert 13 Axle trailer: 3+3+3 setup

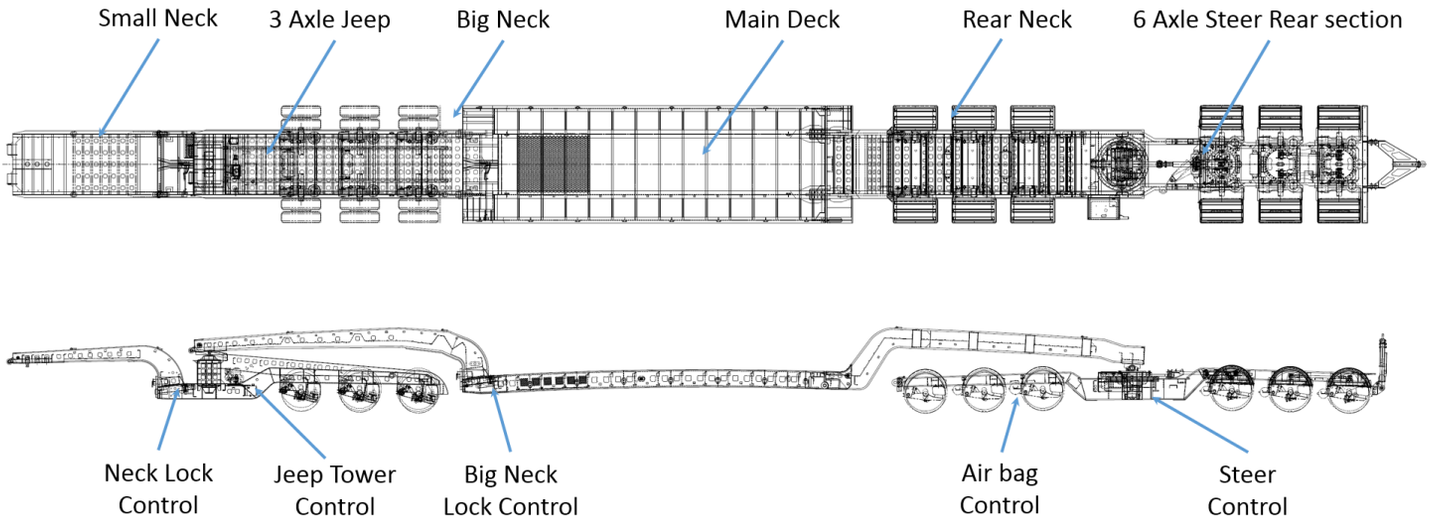

Neck Lock Control

Jeep Tower Control

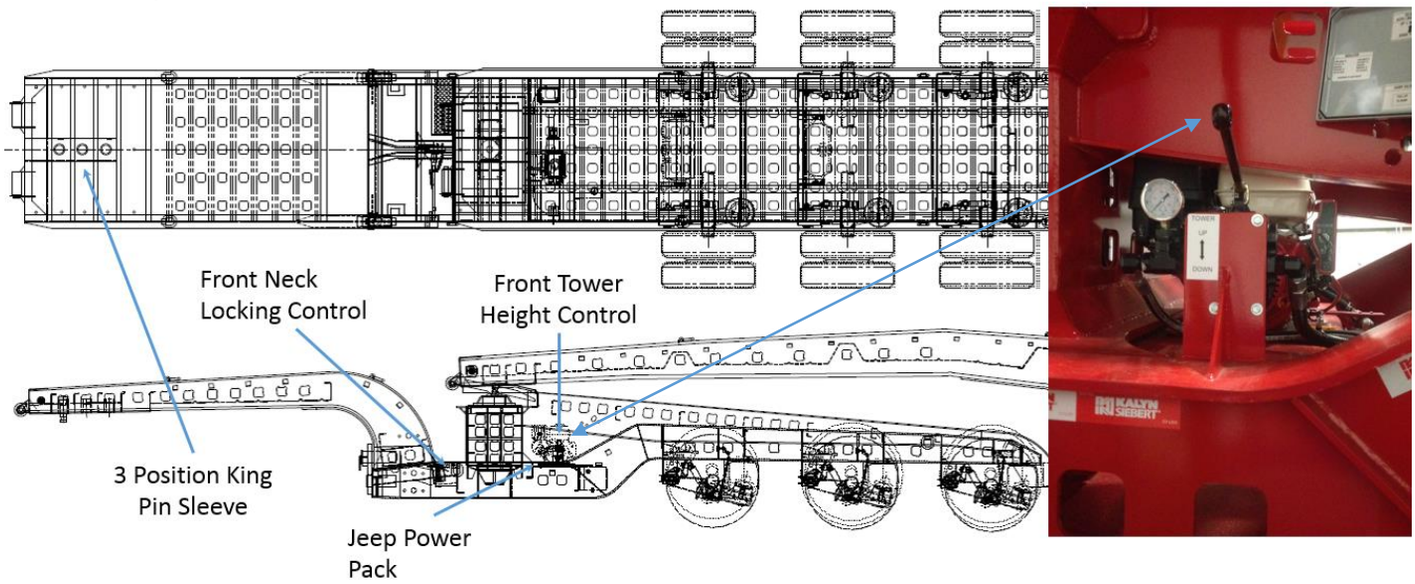

Jeep Air Bag Control

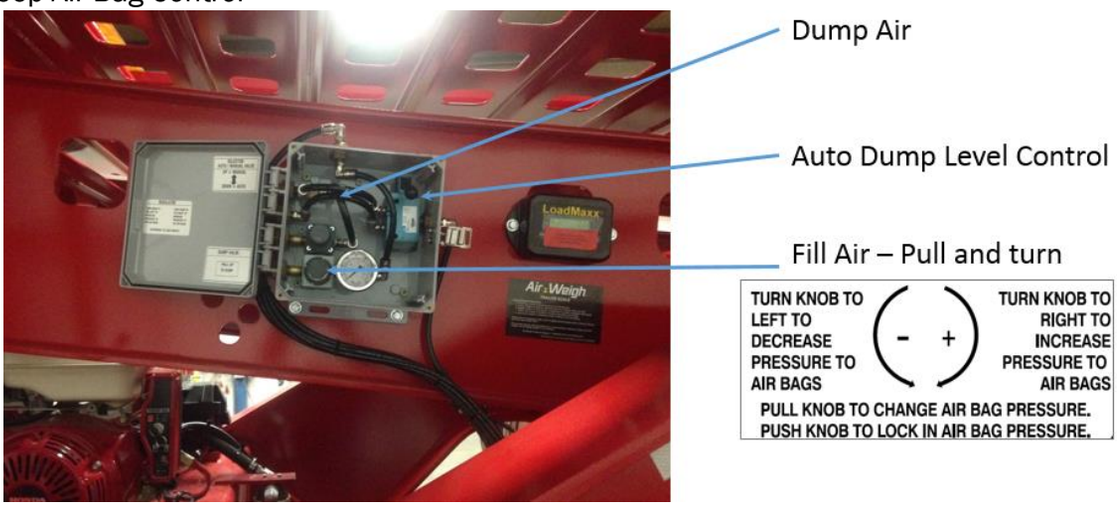

Steer Control & Remote Control

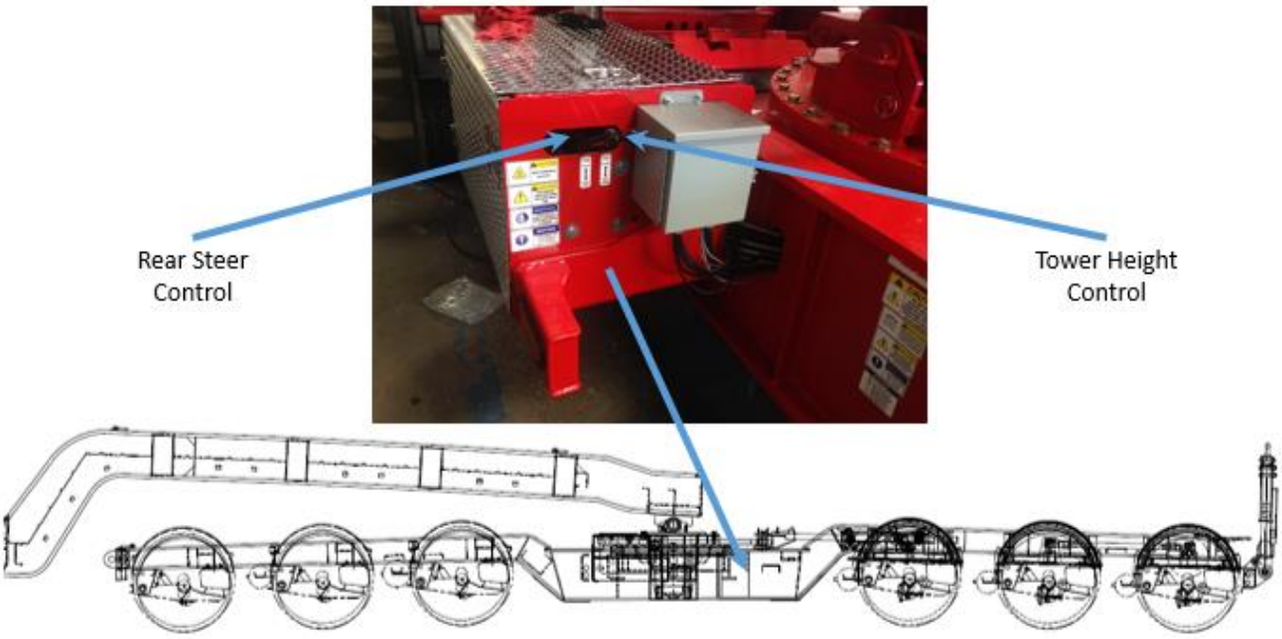

Air Bag Ride Height control is located on the road side of the trailer rear section before the tower.

D.5. Equipment Operations

Remove Neck from Trailer:

a) Disconnect the kingpin, air and electrical, if prime mover is connected to the trailer
b) Lower the trailer until the deck rests on the ground by moving the prime mover forward
c) Un screw the 'U Shim' from the hanger and pull the hanger clear of the pin and lock in non-interfering position

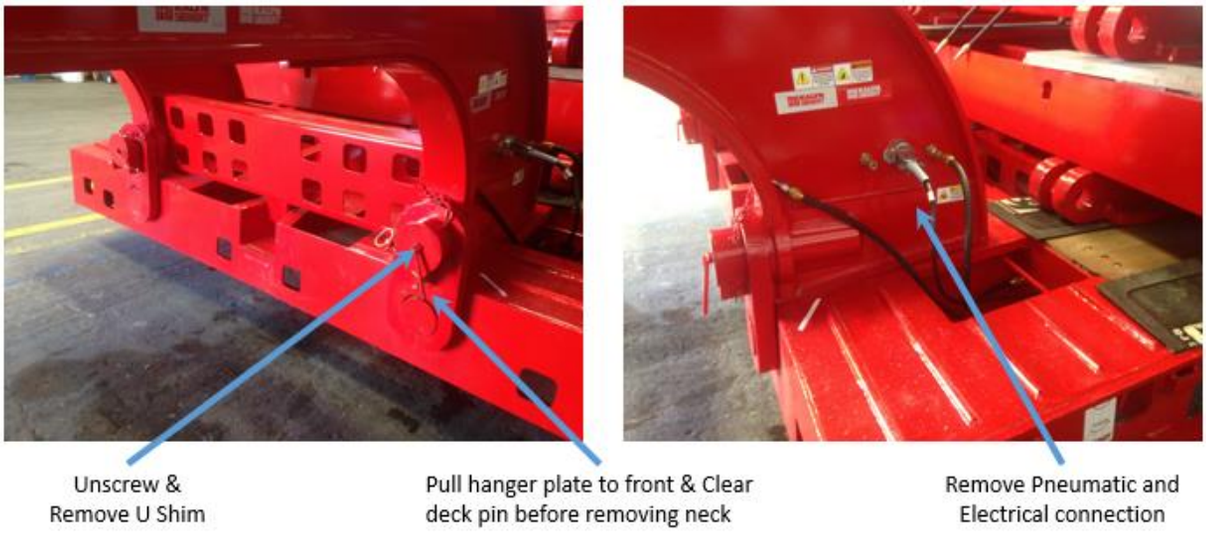

d) Back the prime mover, latch the kingpin, connect air and electrical.
e) Unlatch the stinger mechanism

Connect Neck to Trailer deck:

a) After loading / unloading the trailer, back up the truck and gooseneck in the correct position for the stinger to line up with the center of deck and remove blocks. The stinger and tapered front deck pin will help in positioning the neck to the deck. There should be very little gap, if any between front lifting plate on the inner neck and pin on the deck
b) Lock the stinger mechanism
c) Verify that the neck lock pin is fully engaged

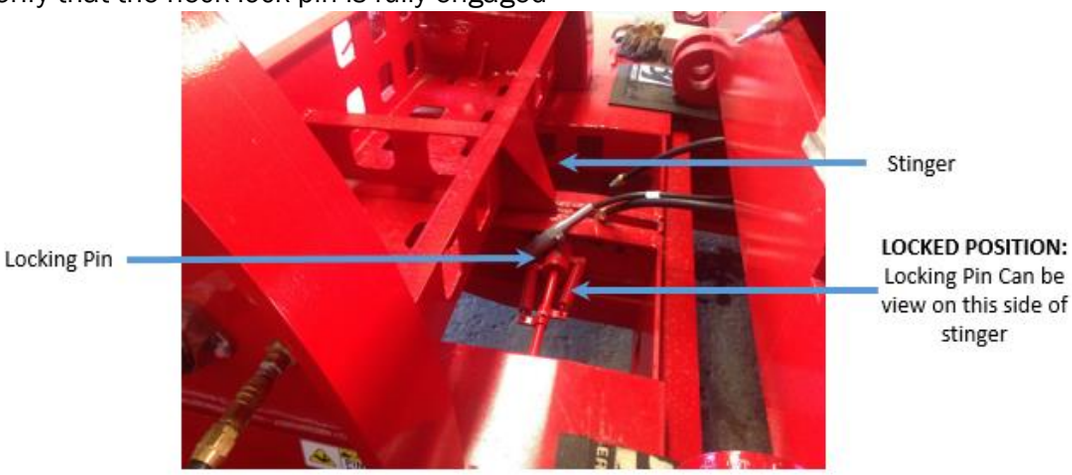

d) Unlatch kingpin, disconnect air and electrical from the neck-tractor
e) Lower the neck, using the slide on the tractor to engage the hanger mechanism
f) Engage the hanger mechanism, use the appropriate hole to hang the deck to achieve the desired ride height
g) Back the prime mover, using the front rollers and frame ramp raise the trailer and engage the kingpin
h) Connect air and electrical, make sure the kingpin is locked securely in position.

Controlling the rear Steer Axle equipment – Automatic Steering:

i) For automatic steering with load on rocking bolster, push steering control valve in the engine compartment inward. NEVER try to operate steering in automatic while steering control valve is in the manual position as this will cause severe damage to Hydraulic cylinder.
j) Place the main connection pin in the two main steering arms to link the turntables and rocking bolster together.
k) While unit is pulled in this situation, as the load turns, the arms will steer the rear axles and follow behind the unit.

l) For a faster response to turns, slide the main steer bar to the closest position to the hydraulic tower and pin the two pins in place. This will be the most common position to run unit in assisting with the unit turning back under at a faster time.

m) Alarms will sound when unit is almost full turn. This is to warn driver that unit is at maximum turn and damage could result if pushed beyond this point.

n) "Drift" or tracking of dolly while in Automatic

   a. There are 6 adjustable bolts on the main steer arm. These may be adjusted side to side to change the alignment of the two sections of the steer dolly. Depending on the crown of the road, length and weight of the load, it may be necessary to adjust the axle assemblies to be in line or somewhat out of alignment to maintain a straight track behind the tow vehicle and load. By moving the steer bar in increments of approximately 1/8" of an inch at a time the tracking may be adjusted to keep the unit headed the right direction and avoid drifting off the road or into oncoming traffic.

Controlling the rear Steer Axle equipment – Manual Steering:

a) Remove the connection pin between the two main steer arms and place in holder at side of unit.

b) Pull the steering control valve in the engine compartment outward to engage hydraulic system.
c) Remove top cover from engine compartment to avoid overheating of power pack.
d) Turn fuel on, choke engine and start.

e) Brakes must be released to steer unit and avoid damage to tires or other components.
f) Using remote control or manual steering the unit can be turned for corners or backing into areas needing more control.

Rear tower height setup:

a) To steer unit in the manual position using the hydraulic control levers, lift UP to steer the unit LEFT and push DOWN on the lever to steer the unit RIGHT.
b) To operate the hydraulic tower, lift UP to RAISE the tower and push DOWN to LOWER the hydraulic tower.

c) Toggle the control to manual
d) Pull the knob and adjust the air pressure by turning the knob
e) Push to lock at desired height of the rear section

Loading and Distribution:

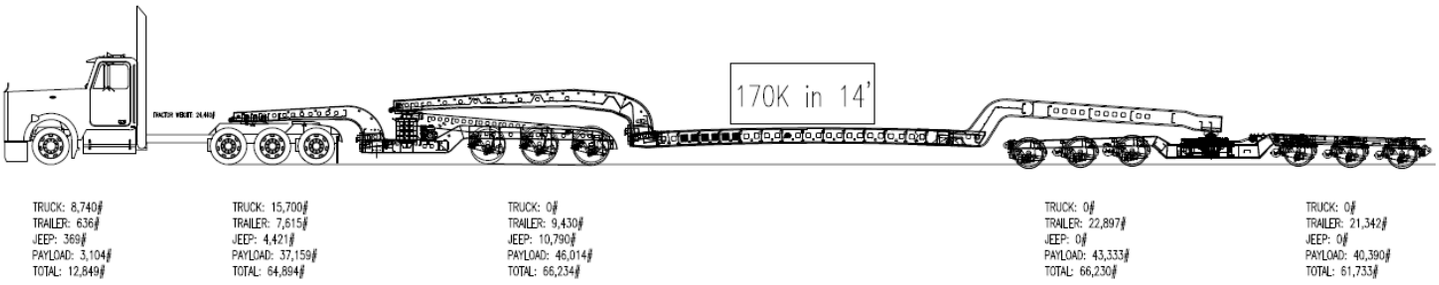

Tonnage of the payload, proper load distribution and legal requirements demands different configurations of equipment.

WARNING

With Deck extension(s) installed, load must be two point blocked 2' maximum behind goose neck and 2' maximum in front of rear section & supported over an area of 24". With load in this position, the equipment is **De-Rated** by **15%**

NOTICE

Please follow all local laws, understand route & capability of equipment before loading and operating.

Office: 657.650.2763 mike@powercrane.com 8502 E. Chapman Ave., Ste. 455, Orange, CA 92869

Configuration of Complete Unit during Transport without Load:

NOTICE

The above shown are some configurations and not the entire possibility of combination of systems offered at Kalyn Siebert. Contact us for more possibilities.

Office: 657.650.2763 mike@powercrane.com 8502 E. Chapman Ave., Ste. 455, Orange, CA 92869

E. Preventative Maintenance

Preventative maintenance is maintenance that is regularly performed on a piece of equipment to lessen the likelihood of it failing. Preventative maintenance is performed while the equipment is still working, so that it does not break down unexpectedly. Lubrication and service performed at regular intervals will keep the Kalyn Siebert trailer in top operating condition for the longest period of time. The importance of regular inspection cannot be over-emphasized. Making necessary adjustments, tightening nuts and bolts, checking air lines, lights and wiring connections will help prevent serious trouble and delays on the road. The driver should be the first line of defense in Preventive Maintenance. A conscientious and alert operator will promptly report all need for adjustment or repair. A vehicle safety check should be performed daily prior to operation.

The driver should be the first line of defense in Preventive Maintenance. A conscientious and alert operator will promptly report all need for adjustment or repair. A vehicle safety check should be performed daily prior to operation. Preventative maintenance along with proper operation of the trailer will ensure low cost of ownership of Kalyn Siebert Equipment.

E.1. Lubrication

Use recommended lubrication based on the application. It is not the policy of the Kalyn Siebert to guarantee lubricant performance. The responsibility for the quality of any lubricant rests solely with the distributor or manufacturer of the lubricant.

Lube Chart

Greasing Points – Overall View

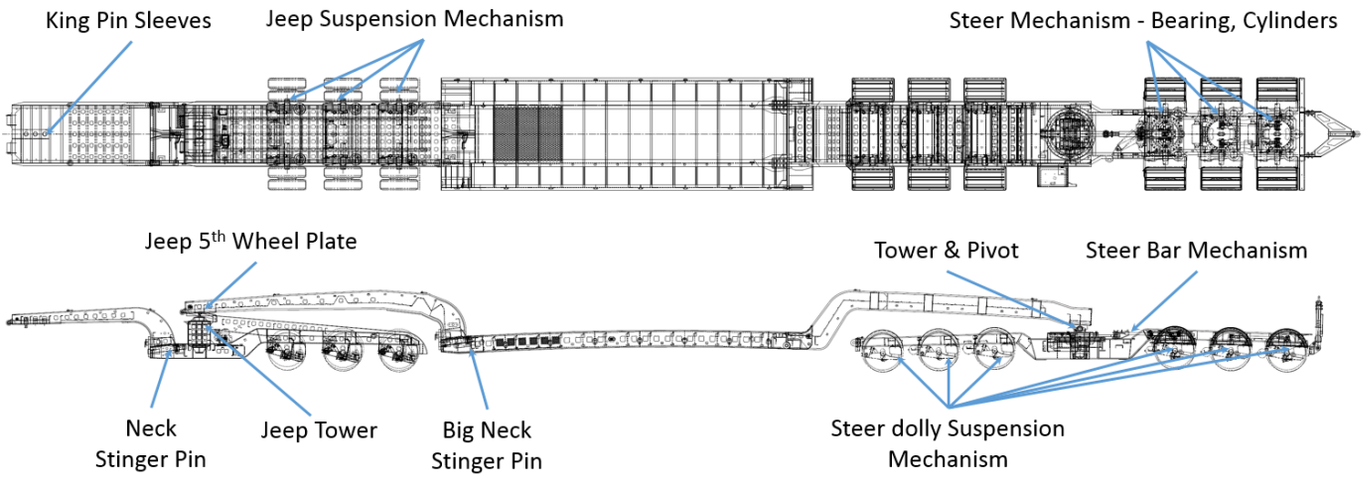

Item	Lubrication Interval	Trailer Part	Lubrication Requirement
1	Every 2000 miles	Brake cam shaft bearing	E.P.I Chassis grease N.L.G.I Grade 1
2	Every 2000 miles	Cam Shaft Bearing bracket	E.P.I Chassis grease N.L.G.I Grade 1
3	Every 2000 miles	Brake shoe anchor pins	E.P.I Chassis grease N.L.G.I Grade 1
4	Every 25,000 miles	Wheel Bearing	OIL SAE 85W-140 A.P.I Service GL-5
5	Every 25,000 miles	Slack Adjusters	E.P.I Chassis grease N.L.G.I Grade 1
6	Every Month	Rollers (If applicable)	E.P.I Chassis grease N.L.G.I Grade 1
7	Every 6 Months	Landing Gear (If applicable)	E.P.I Chassis grease N.L.G.I Grade 1

E.2. Tires & Wheels

Inspect tires and wheels daily for proper inflation and even wear of tread.

E.2.1 Wheel Bearing Adjustment

Bearing adjustment should be 0.001”-0.005” end play and a minimum of pre-load. Use the following procedure:

- Tighten inner jam nut with a 12 inch wrench while turning wheel in both directions until there is a slight bind which indicates all bearing surfaces are in contact.
- Back off inner jam nut 1/3 turn to allow the wheel to rotate freely.
- Install washer and tighten outer jam nut.
- Final bearing adjustment should be with 0.001” to 0.005” end play. Tighten nuts at this position.

Be extremely careful when working with tires and wheels. Tires & wheels can come apart with explosive force. Never attempt to disassemble a wheel with an inflated tire mounted on it.

E.3. Brakes

The wheel brakes are equipped with slack adjusters for easy brake adjustment to compensate for brake lining wear. It is recommended that slack adjuster arm travel be held to a minimum for most efficient braking action. The brakes should be adjusted when total arm travel reaches 1-1/2”. To adjust brakes, depress lock sleeve on slack adjuster, then turn adjustment screw as required. Make sure lock sleeve returns to lock position when adjustment is complete. Every 5000 miles, the brake camshafts should be lubricated with approved chassis lubricant. Every 10,000 to 25,000 miles, the brakes should be serviced as follows:

a) Remove wheels and hubs.

b) Inspect brake roller shafts, cam rollers, anchor pins, camshaft support bushings spider bushings and camshaft for wear and replace if necessary. Lubricate these parts with chassis lubricant upon reassembly.
c) Inspect brake linings for wear, loose rivets and any signs of grease on the braking surface. Oil-soaked linings are not reusable and must be replaced. Check to ensure that the linings have not worn to the point that rivet heads are contacting inside surface of drum. Reline or replace brake shoes if necessary.
d) Check inside surface of drum. Rebooting of drums is not recommended, as the strength of refaced drums is greatly reduced. If drum is worn, replace it.
e) Service the wheel bearings and seals if required. Reassemble hubs and wheels.

E.4. Torque Requirements

Tighten all bolts on trailer periodically with the following schedule

f) First 5 days of service
g) First 30 days of service
h) First 60 days of service
i) Every 90 days thereafter

Torque requirements for clean lubricated bolt threads only

SAE Grade 5

Bolt Size (in)	1/4-20	5/16-18	3/8-16	7/16-14
Torque (ft-lb)	6.3	13	23	35

SAE Grade 8

Bolt Size (in)	1/2-13	5/8-11	3/4-10	7/8-9	1-8	1.25-7t
Torque (ft-lb)	80	160	280	450	680	1480

The above values do not apply to air or hydraulic fittings.

E.5. Axle Alignment

Properly aligned trailer axles optimize fuel economy, drive ability and help prevent excessive tire wear. Single Point Suspension Alignment Procedure is described here.

a) Before measuring axle alignment, unload the trailer and free the suspension of any “binds” by pushing the trailer backwards and then pulling the trailer forward. While pulling the trailer forward on a level floor, apply the brakes and release. This will assure that the adjustable undercarriage is in its rearmost locked position. Trailers with air ride suspensions should be aligned with the suspension at its nominal ride height. The trailer MUST be level from side to side as well as from front to rear.
b) Neither service nor parking brakes should be applied during the measurement procedure

c) Use axle end extenders (or remove the outer wheels and any obstructions) to achieve a straight line for measuring from the king pin to the axle ends.

d) You will need the following tools for proper axle alignment inspection:
- Spring loaded, kingpin extender with bubble level
- Axle end extenders
- 50 ft. steel tape
- Adjustable tram
- Gauge for measuring axle center to axle center

e) Measure distances A and B from the king pin to the front axle. Refer to Figure A. These must be equal within 1/8 inch of each other. Measure distances C and D between axles using the gauge as shown. Note that trailer axles have dimples or recesses at the center of the axle spindle ends; these also must be equal within 1/16 inch of each other. Determine the lateral centerline of the trailer body and axles. Distance E should not exceed 1/4 inch for either axle. (Distance E is the distance between axle and trailer centerlines.)

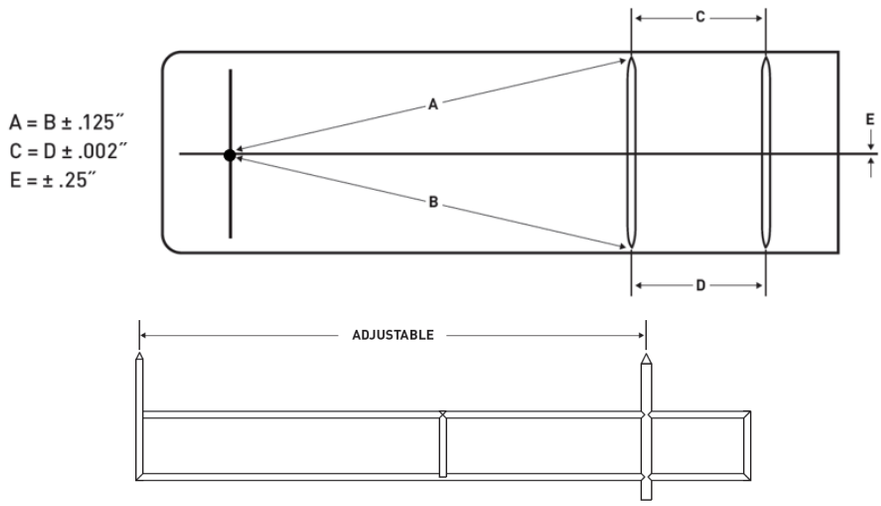

f) Be sure to:
- Always measure to the front axle ends for accurate alignment.
- Avoid measuring to the rims, suspension brackets, hub cap vent holes, brake drums, etc. This can result in improper alignment.
- Check and repair or replace problem suspension parts if you have trouble obtaining true alignment.
- Always align any succeeding axles with the front axles, not the kingpin.

E.6. Preventative Maintenance Schedule

Trailer should be inspected to insure it meets D.O.T. requirements. Refer to D.O.T. Transportation of Hazardous Materials Handbook (paragraph 177.824) if hazardous materials are to be hauled.

Use the following schedule to handle preventative maintenance work on the Kalyn Siebert trailers.

Daily	
Anti-Lock Brake System	Check for proper operation
Lights and Wiring	Check all lights for proper operation
All Bolts	Visually check for tightness
Air Reservoirs	Drain at the end of each shift
Tires	Check for proper inflation and inflate
Weekly	
Wheel Seals	Check for oil leakage and oil level
Wheel Lugs	Check for proper torque
Wiring	Check all connections
Suspension Bolts	Check for proper torque
Monthly	
Supports	Lubricate; check mounting bolts for proper torque
Axle Camshafts	Lubricate all grease fittings
Every 5,000 miles	
King Pin Alignment	Check for proper alignment
Brakes	Adjust as needed
Wiring	Check for chafed or broken wires, ground wire connections, loose wire retaining clips and dielectric grease.
Upper 5th Wheel	Lubricate
Suspension	Check for proper bolt torque
Every 10,000 TO 25,000 miles	
Wheel Bearings	Verify proper end play and adjust as necessary
Brakes	Inspect linings, free-up brake shoes and anchor pins

⚠ CAUTION

All the operation including preventative maintenance procedure on the Kalyn Siebert equipment should be done by trained personal.

NOTICE

The above mentioned are part of basic preventative maintenance procedures and not the complete list of items that could be maintained on the Kalyn Siebert trailers.

F. Parts of your Equipment

This segment of the manual shows the parts of a standard Kalyn Siebert trailer. For specific part to be reordered refer to the specification of the build since all the equipment built is customized and may have different parts associated. If parts are not mentioned on the specification sheet contact Kalyn Siebert Sales team to get assisted.

Overall Curb Side View

*Actual Drawing of the Unit

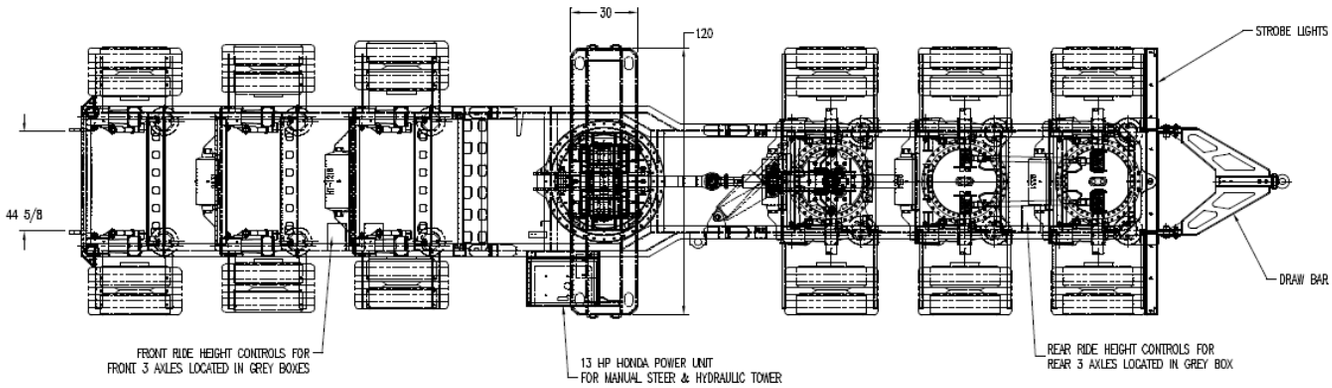

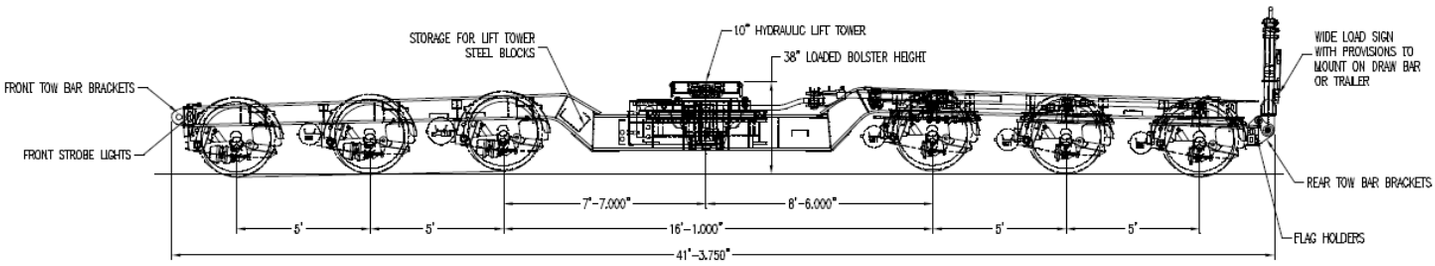

Optional Equipment

Light Weight - Oversize Load Sign

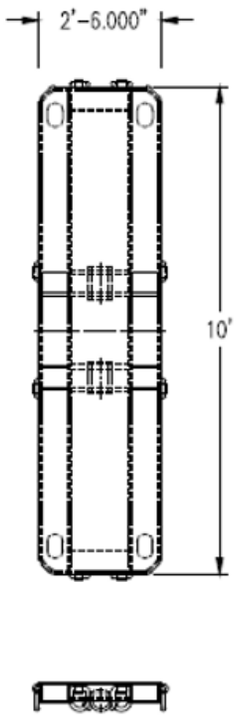

Rocking Bolster

The following are the part numbers of major assemblies and components of the trailer.

Part Description	KS Part Number	Qty.
Main Drawing (REF)	A900130	1
Dolly Frame	B400176	1
4th Axle Turn Table	B400177	1
5th Axle Turn Table	B400178	1
6th Axle Turn Table	B400179	1
Center Turn Table	S800337	1
Linkage	S800339	1
Hydraulic Tower Inner Box	S800338	1
Bolster	S800328	1
Hydraulic Motor Toolbox	S800329	1
Hydraulic Tower Blocks	S800330	1
Draw Bar	S800341	1
Wide Load Sign	S800342	1
Tire	M2457017516	24
Valve	GYTR574	24
Wheels	28656	24
Lug nuts	WN888T	96
Hub	001-00133L	12

Office: 657.650.2763 mike@powercrane.com 8502 E. Chapman Ave., Ste. 455, Orange, CA 92869

Part Description	KS Part Number	Qty.
Axles	D22AX703A661-1	6
Bearing and Seals	ABCS	6
Suspension	2404107	6
D rings	9100702	12
D ring clips	9100703	12
Document Holder	97960	1
Air and Electrical Kit	X8413	1
Hydraulic Kit	X8422	1
Lodar 4 Function Remote	X8183-2	1
Mud flaps	MFA2424	1
Beacon Light	TLSTROBEKIT	1
Straight Brakes	30SCN2-1557	6
Spring Brakes	3030TL2-1559	6
Serial Plate	DECAL1	1

F.1. Ordering Parts and Accessory equipment

For ordering exact parts and accessory equipment to operate with your equipment please contact the parts team at Kalyn Siebert. Here is the contact information

Phone: 254-248-3340 or 254-248-3348
Email: Parts@kalyntx.com

Please use your equipment model name and VIN information from the data plate while ordering right parts.

G. WARRANTY

The Kalyn Siebert Standard Warranty is included in this manual. In the unlikely event you need warranty service on your equipment purchased from Kalyn Siebert or its distributors, contact the distributor or Kalyn Siebert (1-254-865-7235, ext. 6234) directly, for service and repair procedures.

For all parts, claims or inquiries, refer to the model and serial number of your unit. This information is found on the equipment's data plate.

G.1. LIMITED WARRANTY AGREEMENT

February 26, 2015

A copy of the warranty agreement is also available online at www.kalynsiebert.com

G.1.1. Warranty Limits

G.1.1.A. Kalyn Siebert, warrants its trailers to be free from defects in materials and workmanship under normal use, when proper service and maintenance as described in its Service Bulletins and Operation manuals are performed and with loads not exceeding the manufacturer's rated capacities, for a period of twelve (12) months from the date when these products are delivered to the first purchaser.

G.1.1.B. Kalyn Siebert's sole obligation under this warranty shall be limited to repair or replacement, at its option, of any defective part of the warranted equipment which is the result of defective material and/or workmanship of parts furnished by Kalyn Siebert which is returned to Kalyn Siebert or its designee round trip freight prepaid. Kalyn Siebert does not assume any liability for transportation charges, loss of profits, direct or indirect losses and consequential losses or any other damages or delays.

G.1.1.C. Any improper use, operation beyond rated capacity, substitution of parts not approved by us, or any alteration or repair by others in such manner, as in our sole judgment, affects the product materially and adversely, shall void this warranty.

G.1.1.D. Kalyn Siebert's warranty administrator, must authorize all labor and parts. Failure to get this authorization will result in no warranty payment of any kind.

G.1.2. Repair and/or Replacement Schedule

G.1.2.A. Main frame: Kalyn Siebert, shall bear that portion of the cost of repairing or replacing the main frame of the equipment found to be defective within a sixty (60) month warranty period on following schedule:

One (1) year – 100%	Two (2) years – 80%
Three (3) years – 70%	Four (4) years – 60%
Five (5) years – 50%	

G.1.2.B. Component parts and all other frame parts: Components manufactured by Kalyn/Siebert, shall be warranted for one (1) year.

Components manufactured by others and supplied by us will be subject to warranties, if any, of their respective manufacturers.

G.1.3. Procedure for Handling Warranty Repairs

G.1.3. A. The customer is responsible to contact Kalyn Siebert, warranty administrator with the following information:

I. Trailer model and serial number

II. Explanation of defects

III. Any special circumstance that may exist.

The warranty administrator and the engineering staff, to determine if the claim is warrantable, will evaluate this information. After the claim is determined to be warrantable a warranty claim number will be assigned. No warranty claim or invoice will be processed for payment if it does not have a warranty claim number.

G.1.3. B. Warranty repair work is to be performed by Kalyn Siebert or their dealers, or qualified facilities recognized by Kalyn Siebert, (See exceptions at paragraph C). The customer and/or repair facility must provide the warranty administrator the following:

I. Estimated cost of repair

II. Pictures of the damaged area in need of repair

III. All or any part of the defective materials, if requested by the warranty manager

G.1.3. C. Circumstances that preclude warranty repair work at facilities specified in paragraph B, such as overseas locations or others that make transporting the equipment to those locations difficult or impossible, will be handled by contacting the Kalyn Siebert warranty administrator. The warranty administrator will negotiate a resolution in one of the following manners:

I. The owner of the trailer must contact Kalyn/Siebert with the nature of the problem.

II. Authorization for repairs may be made using a local service facility or an on-site repair facility.

III. Pictures and cost estimate must be sent to the warranty administrator for approval prior to work being performed.

IV. In an emergency situation where repairs are made prior to authorization, a summary of repairs and cost must be submitted within (10) days to Kalyn/Siebert for evaluation and approval.

G.1.3. D. Kalyn Siebert, engineering staff must evaluate and issue repair instructions for any repairs that may affect the structural integrity of the trailers. Failure to do so may result in no warranty payment of any kind and the possibility of voiding the warranty on the trailer.

G.1.3.E. Kalyn Siebert, reserves the right to ship parts and/or materials required for the repairs or to authorize the procurement of parts and/or materials at the location of the repairs. Kalyn Siebert, will only reimburse parts and/or materials cost at Kalyn Siebert's approved price whether the work was done by Kalyn Siebert's authorized dealer or by an authorized repair facility.

G.1.3.F. In certain situations, the customer will be required to pay the repair facility for the repairs performed. In this situation, the customer will pay the invoices and, if requested by Kalyn Siebert, will have defective parts and/or materials have shipped to Kalyn Siebert, prepaid.

G.1.3.G. Under certain circumstances, Kalyn Siebert, will require trailers to be returned to the factory for proper evaluation and/or repairs. Transportation expenses to and from the factory will be borne by the customer.

G.1.4. Parts Retention and Parts Shipping

G.1.4.A. Customers or authorized dealers will be responsible to retain all defective parts and materials in which a warranty claim was submitted. All defective parts and materials will be held until one of the following situations occur:

I. Kalyn/Siebert, requests the defective parts and materials be shipped to the factory for evaluation. At this time Kalyn/Siebert, will issue shipping instructions. All defective parts and material shipped to Kalyn/Siebert, must be prepaid by the customer and/or authorized repair facility.

Mailing Address:	Shipping Address:
Kalyn Siebert, P.O. Box 1078 Gatesville, Texas 76528	Kalyn Siebert, 1505 West Main Street Gatesville, Texas 76528

II. Scrapping of defective parts and material after authorized by the Kalyn Siebert,

G.1.5. Reporting Warranty Claims

G.1.5.A. All warranty claims must be reported to the Kalyn/Siebert, warranty administrator within ten (10) days of discovery of defect

G.1.5.B. After Kalyn Siebert, issues a warranty claim number the repairs and/or replacement work must be scheduled within thirty (30) days thereafter. If repairs and/or replacement work is not scheduled in this time frame, Kalyn Siebert, reserves the right to re-evaluate the claim and the cost involved in the repairs.

G.1.5.C. To report a warranty claim, contact The Warranty Manger, Kalyn Siebert
Bus main: 1-254-865-7235, ext. 6350
FAX: 1-254-865-7234
Business: 1-800-525-9689, ext. 6350

G.1.6. Reimbursement for Warranty Repairs

G.1.6.A. Kalyn Siebert, will reimburse labor cost at an approved rate per hour times the established Kalyn Siebert, flat rate time guide. If no flat rate is established, the actual time to perform the operation will be used.

G.1.6.B. Kalyn Siebert, will reimburse parts and materials at Kalyn Siebert's approved price whether the repairs were done by a Kalyn Siebert, authorized dealer or by an authorized repair facility.

G.1.6.C. All labor, parts, and material warranty claims must be authorized and have had prior approval by the Kalyn Siebert, warranty administrator. Failure to do so will result in no warranty payment of any kind.

G.1.6.D. Warranty claims will be processed and paid once a month by check.

G.1.6.E. Kalyn Siebert, warrants that this trailer is manufactured in accordance with the specifications on the order

G.1.6.F. Kalyn Siebert accepts no responsibility for damage to the equipment, or for cargo losses, due to an adverse effect on the equipment caused by the incompatibility of the product being hauled on the trailer. Kalyn Siebert makes no warranty of products manufactured and/or installed by others, the same being subject to warranties, if any, of their respective manufactures or installers. The customer shall bear the risk for damage or loss to the trailer or injury to property or person.

G.1.7. Parts Shipment

G.1.7.A. Kalyn Siebert, is able to ship parts and materials anywhere in the United States with an overnight service depending on the following:

I. The availability of the parts.

II. The weight and size of the shipment meets UPS criteria.

III. The request is placed early enough in the day so the shipment can be packaged, invoiced, and shipped.

G.1.8. Appeals

Any appeals negotiated between the customer and Kalyn Siebert, warranty administrator that cannot be resolved by telephone will have to be negotiated at Kalyn Siebert in Gatesville, Texas.

G.1.9. Validating the Kalyn Siebert, Trailer Warranty

G.1.9.A. In order to validate your Kalyn Siebert, trailer warranty, the attached warranty registration must be signed by the owner and returned to Kalyn Siebert, by the owner.

G.1.9.B. Signing the owners warranty registration acknowledges that the owner has received the owner's manual and a copy of the manufacturer's warranty policy and has read and understands the operation and proper maintenance of the vehicle.

G.1.9.C. Online registration is also available at www.kalynsiebert.com

G.1.10. Point of Contact

G.1.10.A. Kalyn/Siebert, Warranty Manager

1-800-525-9689, ext. 6350
1-254-865-7235, ext. 6350
1-254-865-7234, fax

The above warranty supersedes and is in lieu of all other warranties expressed or implied.

G.2. COPY OF EQUIPMENT REGISTRATION FORM

Please fill all the fields on equipment registration form shown here. The form is available online or with the product manual. Any information collected from our users will not be sold, shared, or rented to others.

Kalyn Siebert Equipment – Warranty Registration Form

KALYN SIEBERT – WARRANTY REGISTRATION FROM

*Unless otherwise noted, all fields are required

TRAILER INFORMATION:

Trailer Serial Number (Full VIN#):_____

In Service Date: _____

OWNER INFORMATION:

Company Name: _____

Contact Name: _____

Address 1: _____

Address 2: _____

City: _____ State: _____ Zip: _____

Phone Numbers: Bus: _____ Cell_____

Fax: _____ Email: _____

Alternate Email (If Available): _____

DEALER INFORMATION:

Dealer Name: _____

Address 1: _____

Address 2: _____

City: _____ State: _____ Zip: _____

Phone Numbers: Bus: _____ Cell_____

Fax: _____ Email: _____

Alternate Email (If Available): _____

Please send this form to us through one of the following methods:

FAX NUMBER: 254 865 7234

EMAIL ADDRESS: fcrandall@kalyntx.com

POSTAL ADDRESS: 1505 W MAIN, GATESVILLE, TEXAS – 76528

Kalyn Siebert

Sample form

KALYN SIEBERT®

ENGINEERED TO PERFORM. BUILT TO LAST.

1505 West Main Street, Gatesville, TX 76528 | 800.525.9689 | www.kalynsiebert.com